Gripper

PARALLEL MOTION
Double Acting

B-2P

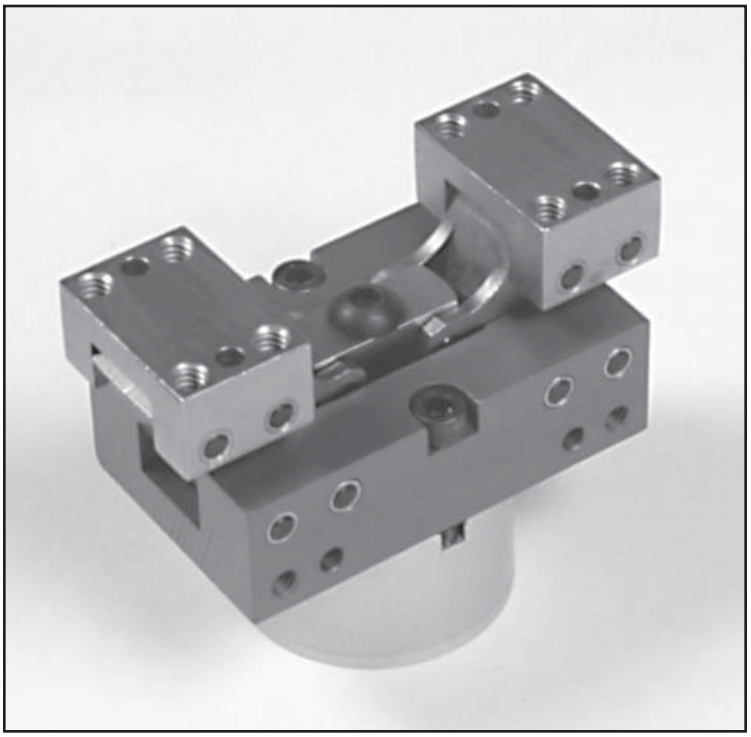

TECHNICAL DATA	
Weight	1.7 lbs
Max Rec. Load	12 lbs
Force @ 80 psi	40 lbs @ F
Operating Pressure	60-100 PSI

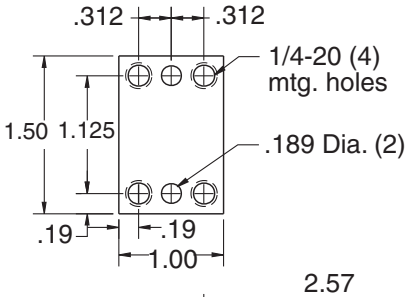

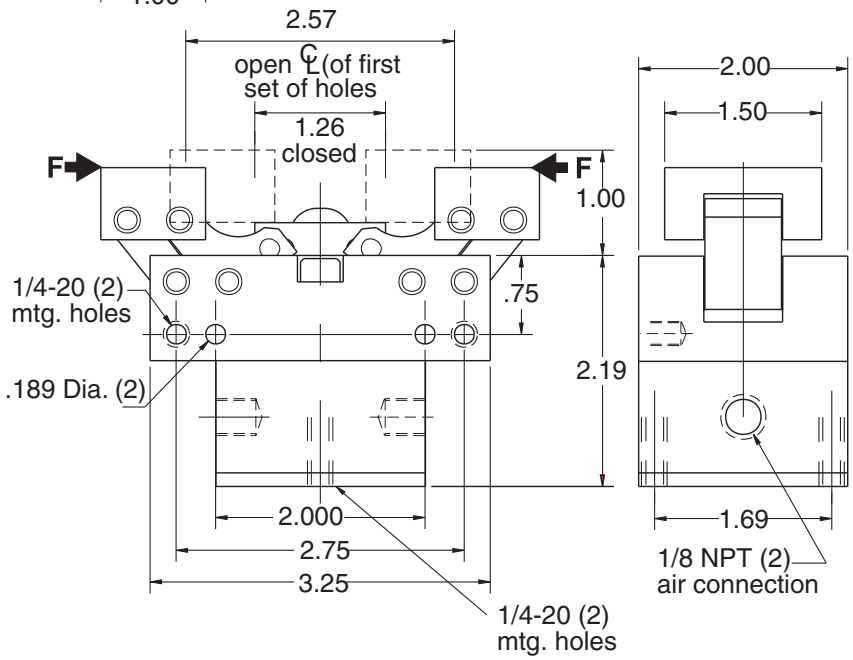

Accessories

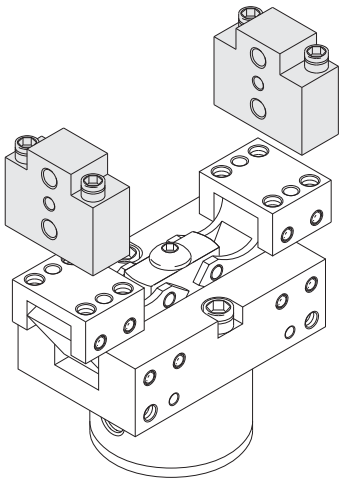

Upright ground steel jaws for mounting tooling

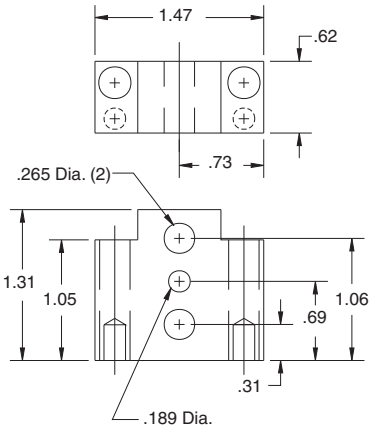

J1-2 jaw for B-2P
(bolts & pins included)

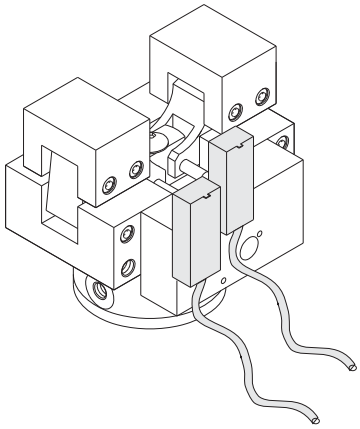

Proximity sensors preassembled for open & closed positions (see page 17)